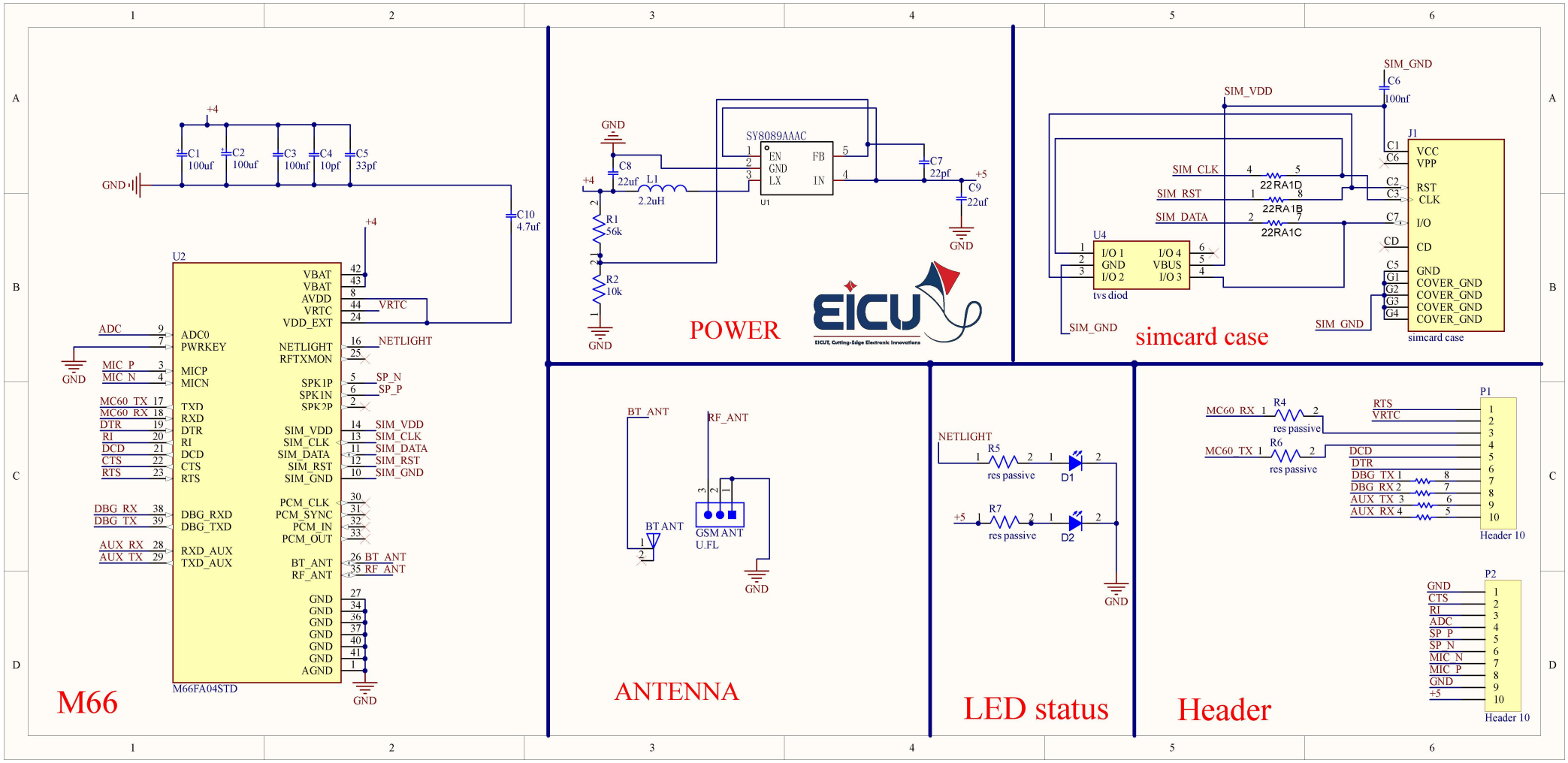
M66
U2
M66FA04STD
+4
C1 100uf
C2 100uf
C3 100nf
C4 10pf
C5 33pf
C10 4.7uf
GND
ADC
MIC_P
MIC_N
MC60_TX
MC60_RX
DTR
RI
DCD
CTS
RTS
DBG_RX
DBG_TX
AUX_RX
AUX_TX
ADC0
PWRKEY
MICP
MICN
TXD
RXD
DTR
RI
DCD
CTS
RTS
DBG_RXD
DBG_TXD
RXD_AUX
TXD_AUX
VBAT
VBAT
AVDD
VRTC
VDD_EXT
NETLIGHT
RFTXMON
SPK1P
SPK1N
SPK2P
SIM_VDD
SIM_CLK
SIM_DATA
SIM_RST
SIM_GND
PCM_CLK
PCM_SYNC
PCM_IN
PCM_OUT
BT_ANT
RF_ANT
GND
AGND
POWER
SY8089AAAC
EN
GND
LX
FB
IN
U1
C8 22uf
L1 2.2uH
R1 56k
R2 10k
C7 22pf
C9 22uf
+5
EICU
EICUT, Cutting-Edge Electronic Innovations
simcard case
SIM_GND
C6 100nf
SIM_VDD
SIM_CLK
SIM_RST
SIM_DATA
22RA1D
22RA1B
22RA1C
U4
I/O 1
GND
I/O 2
I/O 4
VBUS
I/O 3
tvs diod
J1
VCC
VPP
RST
CLK
I/O
CD
GND
COVER_GND
ANTENNA
BT_ANT
RF_ANT
GSM ANT
U.FL
LED status
NETLIGHT
R5
res passive
D1
R7
D2
Header
MC60_RX
MC60_TX
R4
R6
RTS
VRTC
DCD
DTR
DBG_TX 1
DBG_RX 2
AUX_TX 3
AUX_RX 4
P1
Header 10
P2
GND
CTS
RI
ADC
SP_P
SP_N
MIC_N
MIC_P
+5